SmartReflect Light barriers FNDK 07N6910/KS35A

dimension drawing

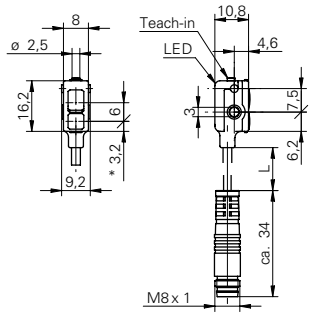

* emitter axis

general data

type	light barrier
light source	pulsed red LED
background position Sde	17 ... 45 mm
scanning range sa	82% Sde
light indicator	LED green
output indicator	LED yellow
sensing distance adjustment	Teach-in
wave length	660 nm
suppression of reciprocal influence	yes

electrical data

response time / release time	< 0,5 ms
voltage supply range +Vs	10 ... 30 VDC
current consumption max. (no load)	25 mA
current consumption typ.	20 mA
voltage drop Vd	< 1,8 VDC
output function	light / dark operate
output circuit	NPN
output current	< 100 mA
short circuit protection	yes
reverse polarity protection	yes

mechanical data

width / diameter	8 mm
height / length	16,2 mm
depth	10,8 mm
type	rectangular
housing material	plastic (PMMA, MABS, PA)
front (optics)	PMMA
connection types	flylead connector M8 4 pin

ambient conditions

operating temperature	-20 ... +50 °C
protection class	IP 65

photo

connection diagram

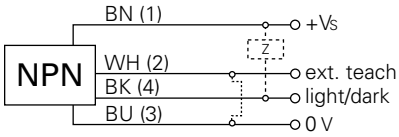

- sensitivity adjustable: via Teach-in button or Teach-in wire input